Modal Analysis of Body in White

G. R. Nikhade
Assistant Professor, Department of Mechanical Engineering
Shri Ramdeobaba College of Engineering and Management
Nagpur-440013 (India)
email: grnikhade@rediffmail.com

Abstract— **Modal analysis is carried out to determine the dynamic properties of structures under vibration excitation. Global car body stiffness is an important design attribute in vehicle design. Therefore accurate characterization of this stiffness is needed. The current industrial method for static stiffness determination has several downsides, amongst others its time consuming set-up preparation. Principle objective of this paper is to study the effect of vibrations on the material properties of structures, especially automobile Body-in-White (BIW) by using finite element analysis tool. A Body-in-White (BIW) is the automobile designing (or manufacturing) stage where the car body is formed by assembled metal sheets, and the main components as chassis, power train, doors, etc. are not still mounted. By determining the natural frequencies of the automobile body, the probability of failure are dramatically reduced and life is substantially increased. Vibration generated from various sources (engine, road surface, tires, exhaust, etc.) should be considered in the design of a car body. These vibrations travel through transfer systems to the steering wheel, seats and other areas where it is detected by the passengers of the vehicle. Transmission routes must be studied and efforts made to keep transfer systems from amplifying vibration and to absorb it instead.**

Keywords- Modal analysis, body-in-white, noise and harshness

I. INTRODUCTION

Noise, vibration, and harshness (NVH), also known as noise and vibration (N&V), are the study and modification of the noise and vibration characteristics of vehicles, particularly cars and trucks. While noise and vibration can be readily measured, harshness is a subjective quality, and is measured either via "jury" evaluations, or with analytical tools that provide results reflecting human subjective impressions. These latter tools belong to the field known as "psychoacoustics." Interior NVH deals with noise and vibration experienced by the occupants of the cabin, while exterior NVH is largely concerned with the noise radiated by the vehicle, and include drive-by noise testing.

NVH is mostly engineering, but often objective measurements fail to predict or correlate well with the subjective impression on human observers. This is partly because the human body has its own frequency response, e.g. A-weighting approximates the ear's response at moderate noise levels, but this does not mean that two noises with the same A-weighted level are equally disturbing. The field of psychoacoustics is partly concerned with this correlation. In some cases the NVH engineer is asked to change the sound quality, i.e. adding or subtracting particular harmonics, rather than making the car quieter [1, 2].

Modal analysis is the study of the dynamic properties of structures under vibration excitation. It is the field of measuring and analyzing the dynamic response of structures and or fluids when excited by an input i.e. measuring the vibration of a car's body when it is attached to an electromagnetic shaker, or the noise pattern in a room when excited by a loudspeaker. Basically there are two different paths from which a modal model is derived i.e., experimental modal analysis, and modal analysis by finite element analysis tool. In this work, BIW of a car is considered for modal analysis. The complete structure of BIW is modeled to perform modal analysis by finite element method to determine the different mode shapes. Next section explains the approach to perform a modal analysis experimentally.

II. EXPERIMENTAL MODAL ANALYSIS

Experimental modal analysis is the process of determining the modal parameters (frequencies, damping factors, modal vectors and modal scaling) of a linear, time invariant system by way of an experimental approach. In experimental modal analysis, the concerned structure is hung in space using bungee ropes and/or air springs. Then the structure is excited with a force of constant magnitude but varying oscillations and the time and frequency response of the structure is measured using hardware like accelerometers, spectrum analyzers, etc. There are four basic assumptions concerning any structure that are made in order to perform an experimental modal analysis i.e. structure is assumed to be linear, structure is time invariant, structure obeys Maxwell's reciprocity, structure is observable. Figure 1 elaborates the generalized process to carry the modal analysis of BIW of car body experimentally[3].

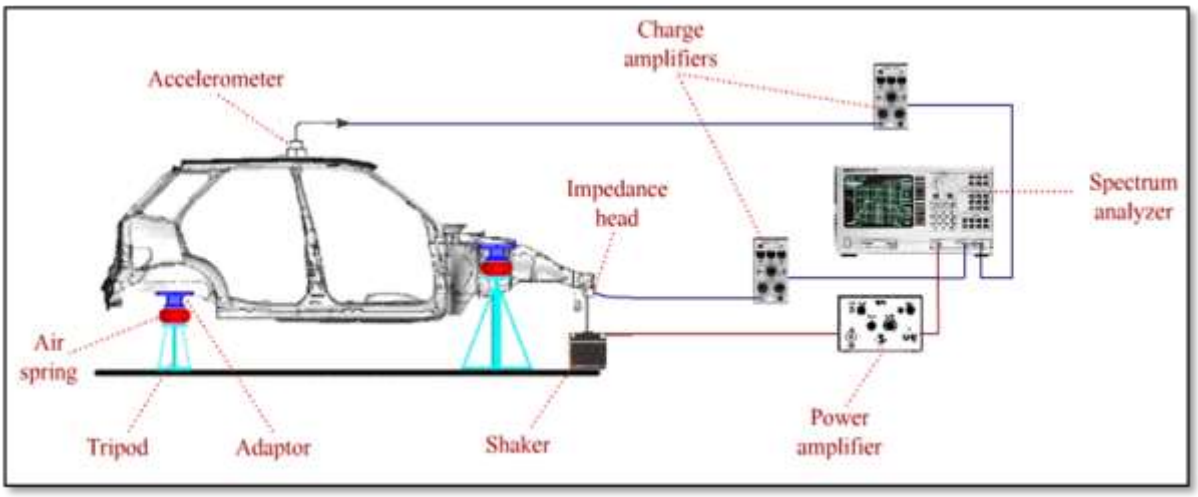

Fig. 1 Experimental test structure

III. FEA APPROACH TO MODAL ANALYSIS

Finite element analysis is a computer simulation technique for modeling and analyzing the effect of the part or model. Finite element analysis is very useful tool to identify dynamic characteristics such as natural frequencies and mode shapes. The body in white selected in this paper for analysis purpose is shown in Figure 2. The various important parts of sedan type BIW is shown in Figure 3 [4].

Fig. 2 Actual BIW considered for modal analysis

The next important step in performing modal analysis of BIW using FEA concept comprises procurement of the dimensions of various parts of BIW required for development of CAD model of BIW. Dimensions of several parts of BIW as shown in Figure 4 are obtained with the help of measuring devices like vernier caliper, flexible measuring tape, steel rule etc. Some basic dimensions of BIW are given in Table I.

TABLE I: DIMENSIONS OF BIW

Wheel base	2450 mm	Ground Clearance	165 mm
Front track	1380 mm	Rear track	1360 mm
Width of Wheel	139 mm	Diameter of wheel	330 mm

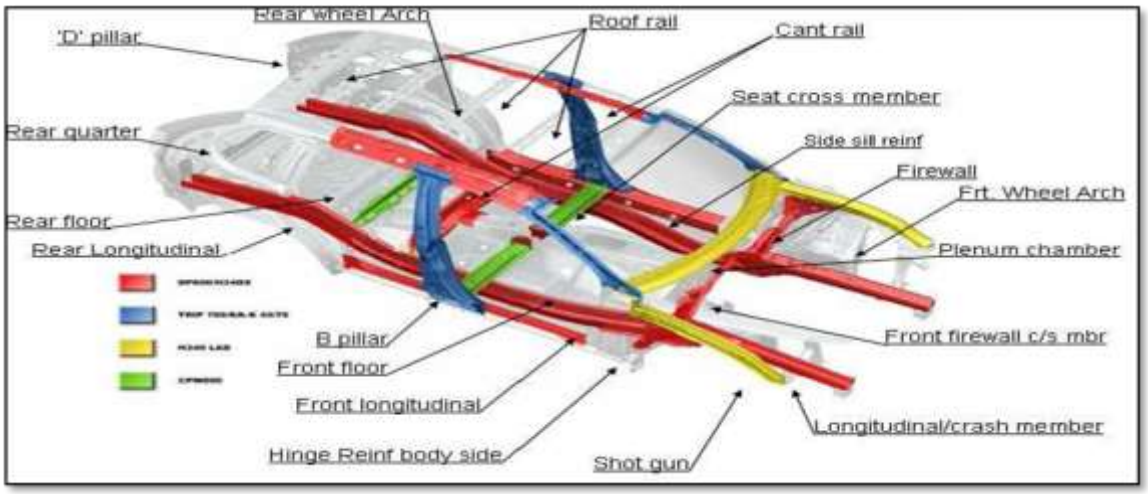

Fig. 3 Details of BIW

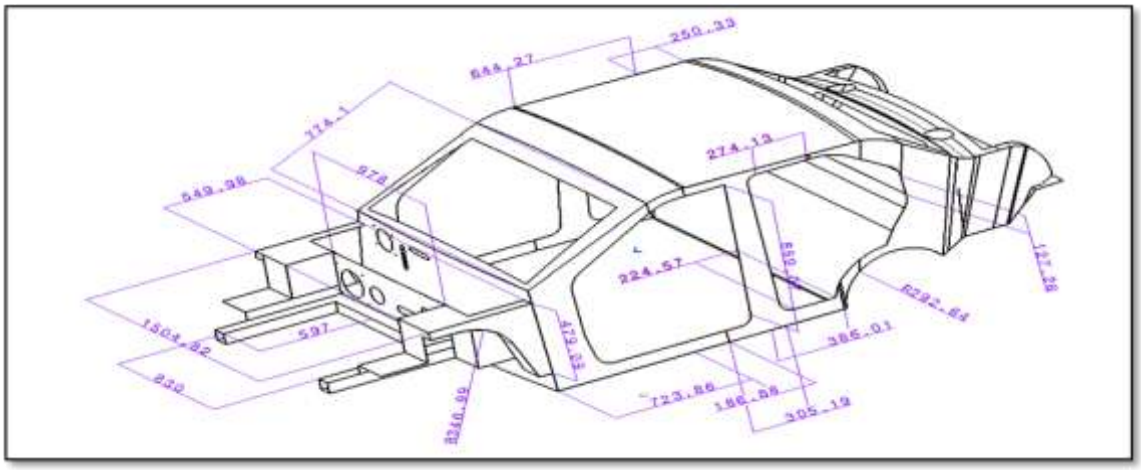

Fig. 4 Drafted view of BIW

Modeling is important stage of modal analysis of BIW using FEA technique to perform analysis. The commercial CAD software package is used to create scaled 3D (Solid model, wireframe model, and surfacing model) model of car BIW. For proposed work, surface model were developed using ANSYS workbench to perform analysis as shown in Figure 5. Figure 6 shows the meshed model of BIW.

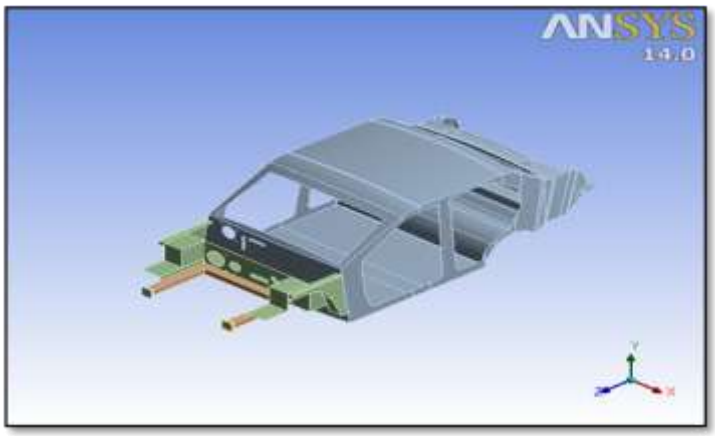

Fig. 5 Surface model of BIW

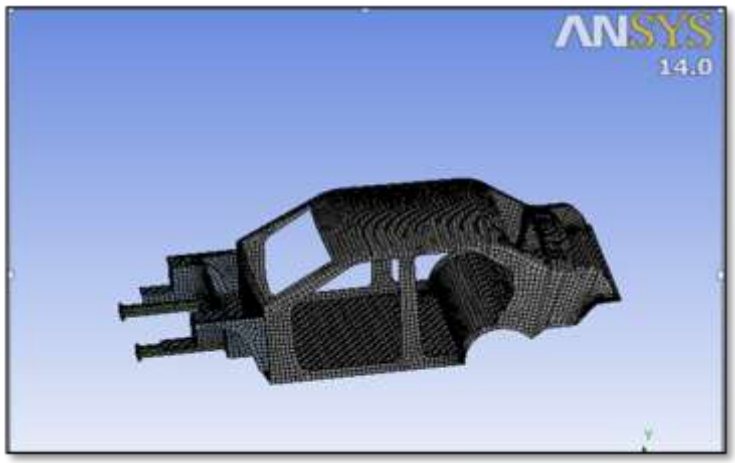

Fig. 6 Meshed view of BIW

The body is subjected to the free-free boundary condition in the modal analysis module of ANSYS workbench. Free-free condition means that the structure is free in space without any restrictions and connections to ground. Such a suspension of the structure ensures that the rigid body modes of the supported chassis are less [5,6,7].

IV. RESULT

After performing the modal analysis, first 6 natural frequencies of the body have been calculated. Major structural modes and corresponding natural frequencies are given in Table II. Different mode shapes with reference to following table are shown in Figure 7, 8 and 9.

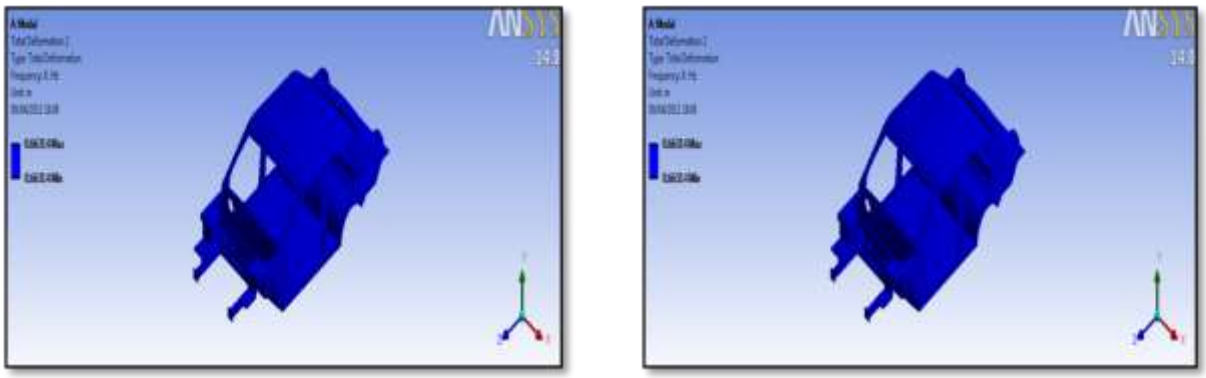

Fig. 7 Mode shape 1 and 2

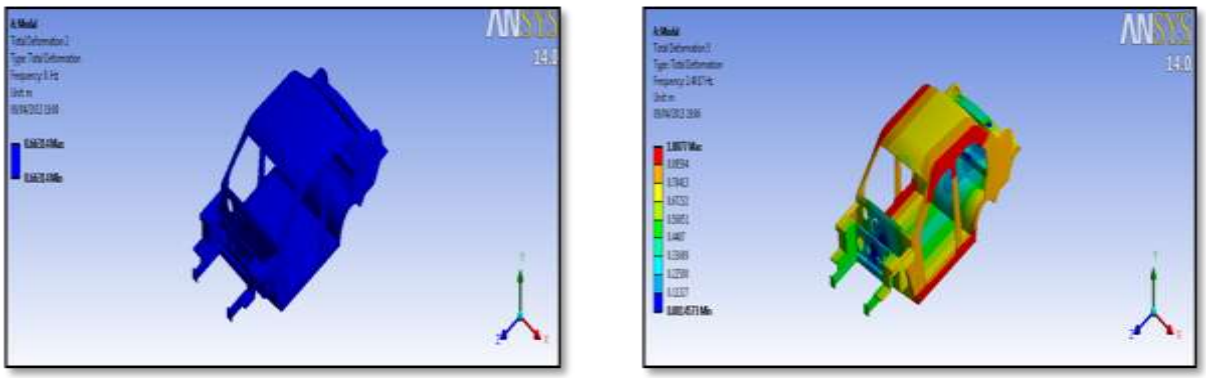

Fig. 8 Mode shape 3 and 4

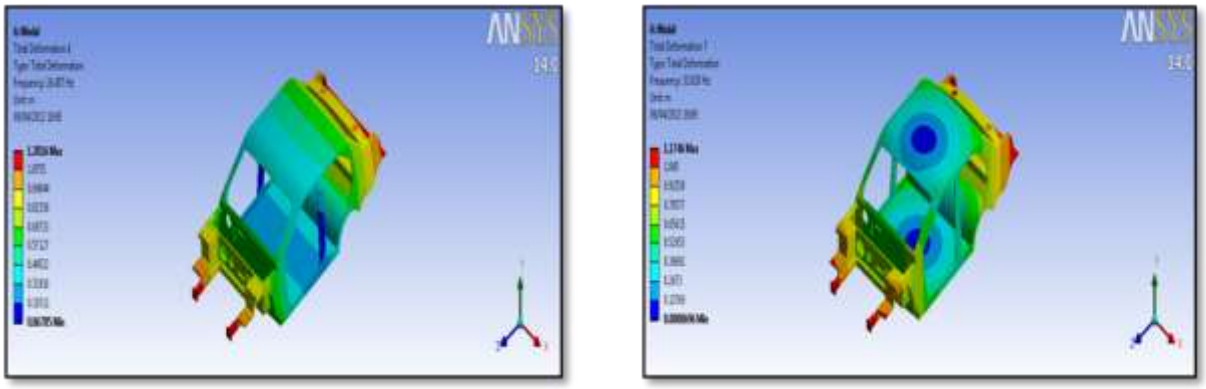

Fig. 9 Mode shape 5 and 6

TABLE II: NATURAL FREQUENCIES

Mode No.	Natural Frequency (Hz)	Mode shape	Mode of vibration
1	0	Rigid body mode	-
2	0	Rigid body mode	-
3	0.00221	Rigid body mode	-
4	2.1487	1st torsion	Rolling
5	26.457	1st bending	Pitching
6	33.028	2nd (side) bending	Yawing

V. CONCLUSIONS

Modal analysis is a natural approach to reducing the number of degrees of freedom involved in structural dynamics problems, and has the added advantage of involving degrees of freedom that have a direct physical meaning. The modal degrees of freedom are easily interpreted in a physical manner. For instance, if a structure responds “mainly in its second bending mode,” or “primarily in its first torsion mode,” it is easy to visualize the overall deformation of even very complex structure. In modal analysis modes associated with frequencies far higher than the excitation frequencies are simply eliminated from the modal basis because their contribution to structural response is negligible. This leads to additional computational savings.

A modal model of a dynamic system can be used to forecast the sensitivity of its modal parameters due to system physical parameter changes. This sensitivity analysis is intrinsically related to structural modification. However, the emphasis here is to identify which physical change is most effective to a proposed modal parameter change such as shifting a natural frequency. This analysis is specifically useful in the redesigning of a dynamic structure when a target on dynamic characteristics is set and a most efficient way to accomplish it is sought.

In automotive engineering, the enormous commercial and safety aspects associated with redesigning a vehicle oblige the best possible understanding of dynamic properties of vehicular structures and the repercussion of any design changes. Keen interest has been placed on combining both experimental modal analysis and finite element analysis in studying automotive components. “Ride comfort" of an automobile is affected by a variety of factors, including high frequency vibrations, body booming, body roll and pitch, as well as the vertical spring action normally associated with a smooth ride. The ride quality normally associated with the vehicle's response to bumps is a factor of the relatively low frequency bounce and rebound movements of the suspension system. Following a bump, the undamped suspension (without shocks) of a vehicle will experience a series of oscillations that will cycle according to the natural frequency of the system. Ride is perceived as most comfortable when the natural frequency is in the range of 60 to 90 cycles per minute (CPM), or about 1 Hz to 1.5 Hz. When the frequency approaches 120 CPM (2 Hz), occupants perceive the ride as harsh. Consequently, the suspension of the average family sedan will have a natural frequency of about 60 to 90 CPM. Modal analysis technique can also be applied to find various parameters like vehicle fatigue life estimation, vehicle suspension with active vibration control mechanism and condition monitoring and diagnostic system for the vehicle engine. Modal analysis also helps in interior noise reduction through structural optimization or redesign. So modal analysis has been an effective technique for automotive engineering, in its quest to improve a vehicle’s NVH.

ACKNOWLEDGEMENT

The authors would like to express his appreciation to Aanand Badwaik, Shrish Pattalwar, Ajinkya Baxy, and Tanooj Chandak, students of Mechanical Engineering for their effort to complete this project.

REFERENCES

[1] S. H. Jee and J. C. Yi, "The Application of the Simulation Techniques to Reduce the Noise and Vibration in Vehicle Development", Seoul 2000 FISITA World Automotive Congress, 2000, pp. 1-7.

[2] J. Helsen, L. Cremers, P. Mas and P. Sas, "Global static and dynamic car body stiffness based on a single experimental modal analysis test", Proceedings OF ISMA, 2010.

[3] C. Schedlinski, F. Wagner, K. Bohnert, J. Frappier, A. Irrgang, R. Lehmann and A. Müller, "Experimental Modal Analysis and Computational Model Updating of a Car Body in White", Proc. of ISMA2004; Leuven, Belgium, 2004.

[4] A. H. Karwande and B. R. Borkar, "Finite Element Modelling and Analysis of BIW Part", International Journal of Emerging Technology and Advanced Engineering, Vol. 3(3), 2013, pp. 202-209.

[5] Ying Yang, Guangyao Zhao, Dongbo Ma and Xiaobin Xu, "Mode calculation and testing of a car body in White", Shock and Vibration Vol. 18, 2011, pp. 289–298.

[6] R. Brincker, P. Andersen, and N. Møller: "Output-only Modal Testing of a car body subject to Engine Excitation", Proc. Of the 18th International Modal Analysis Conference, San Antonio, Texas, 2000.

[7] D. R. Prasad and D. R. Seshu, "A study on dynamic characteristics of structural materials using modal analysis", *Asian Journal of Civil Engineering (Building & Housing)*, Vol. 9(2), 2008, pp. 141-152.